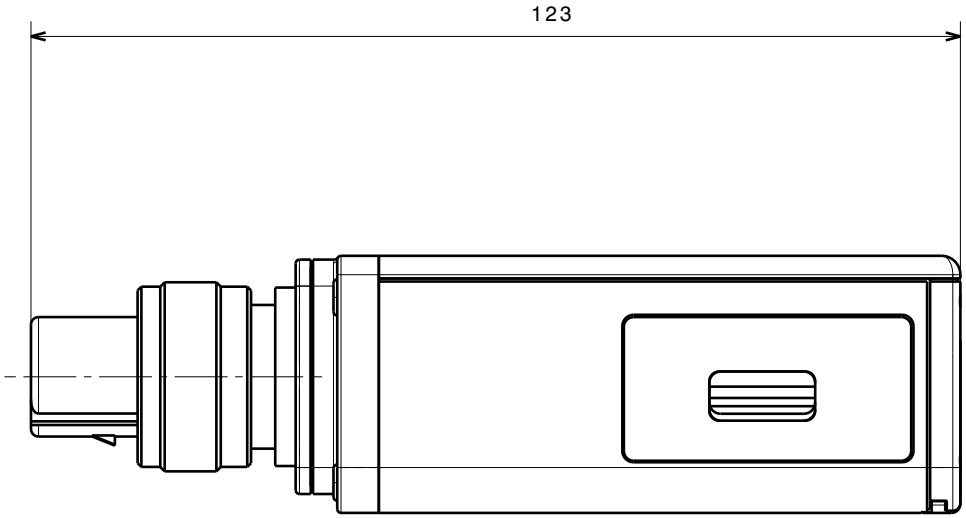
123

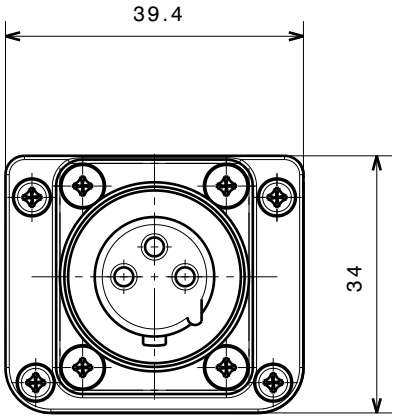
39.4
34

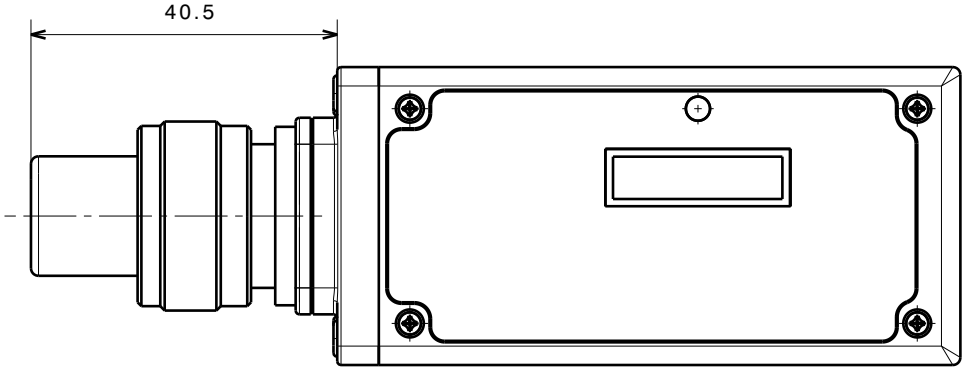
40.5